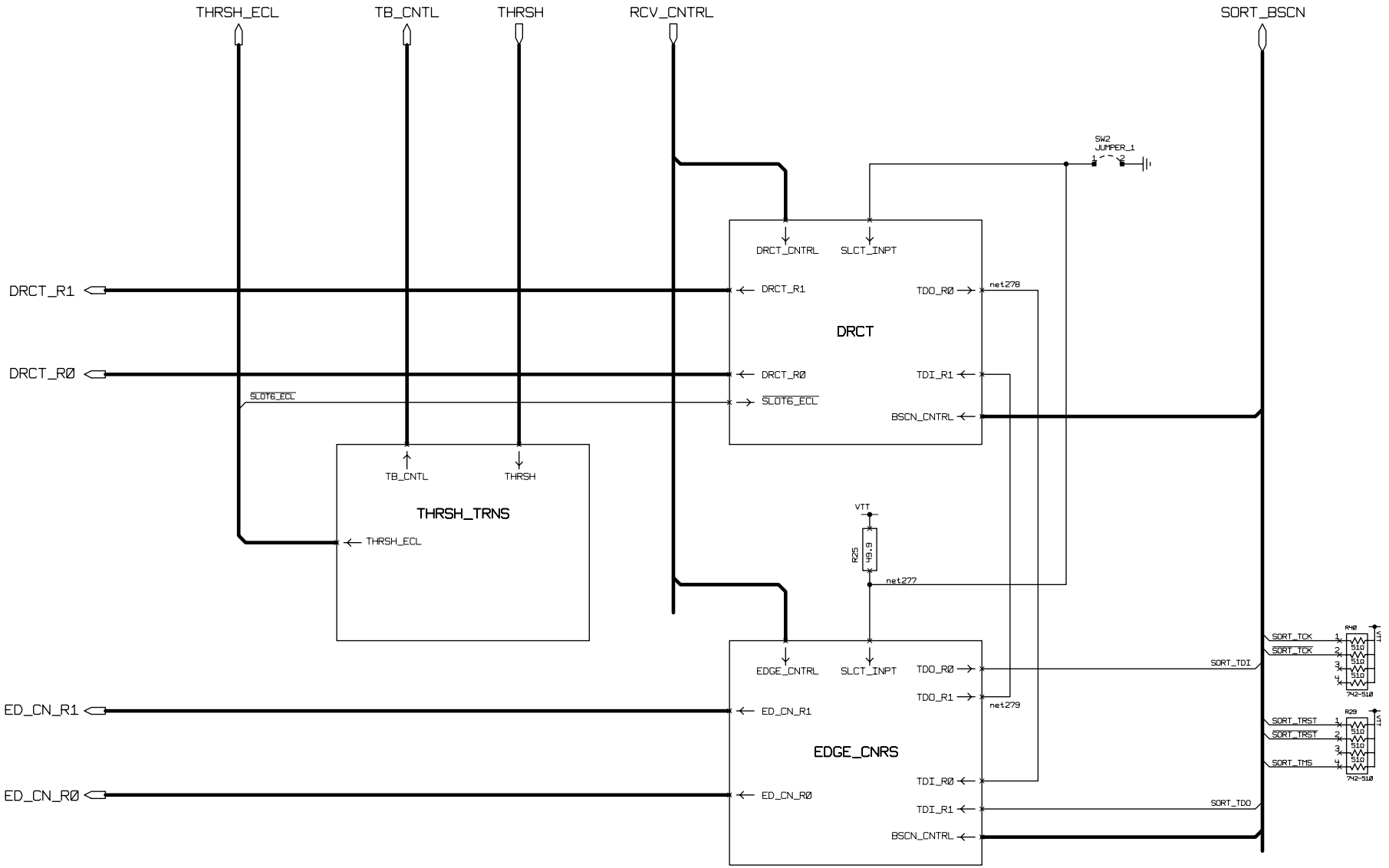


| Changes | By | Date | Drawn JLL | Project CMS_CAL TRIGGER PROCESSOR |
|---|---|---|---|---|
| | | | Date 4/9/01 | EISO CARD |
| | | | CHK'D | BLOCK: BCKP_RCVRS |
| | | | Scale | High Energy Physics |
| | | | | |
| | | | | |
| REVB | JLL | 31/01/03 | C 0750 | University of Wisconsin |