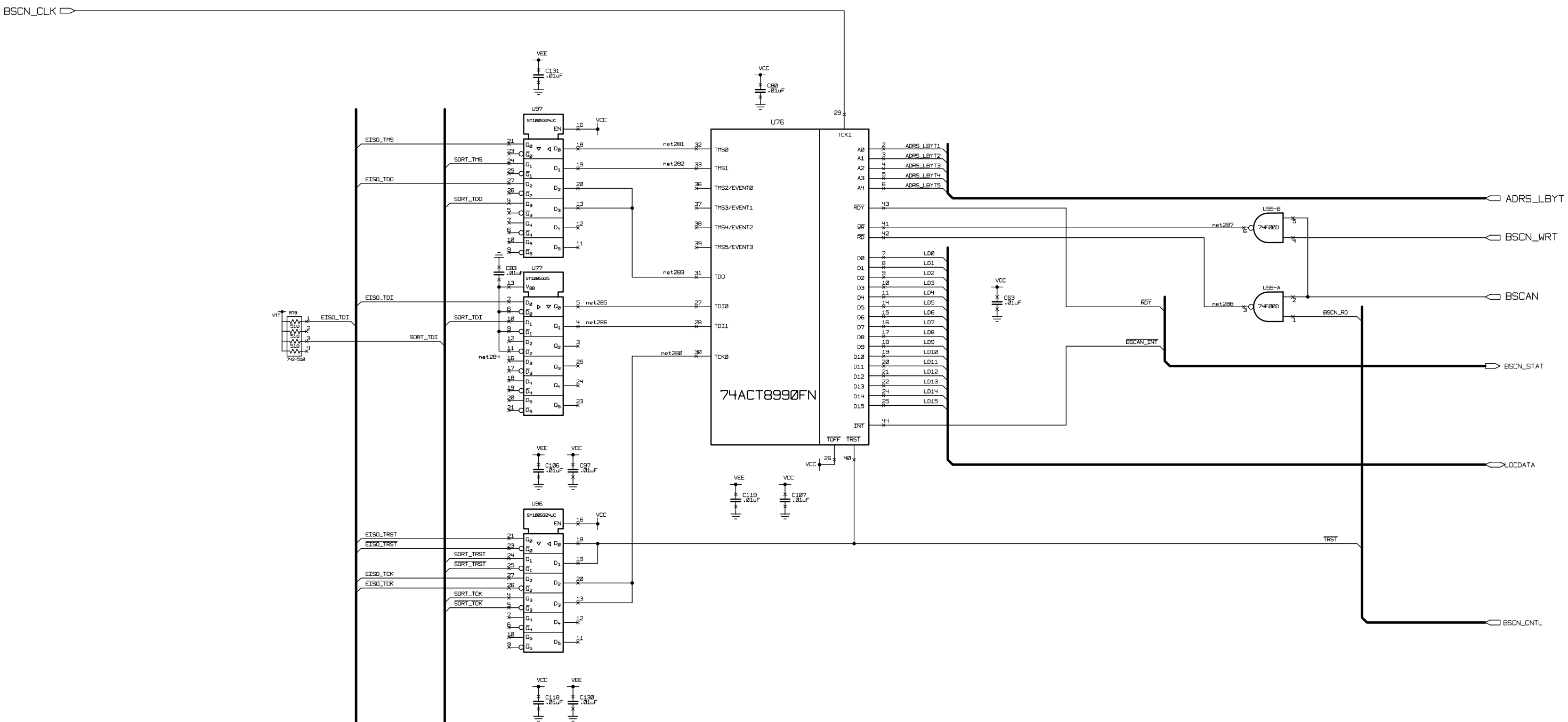


| Changes | By | Date | Drawn JLL | Project CMS CAL TRIGGER PROCESSOR |
|---|---|---|---|---|
| | | | Date 30/10/01 | EISO CARD |
| | | | CHK'D | BLOCK: BSCAN |
| | | | Scale | High Energy Physics |
| REVB | JLL | 31/01/03 | D0792 | University of Wisconsin |