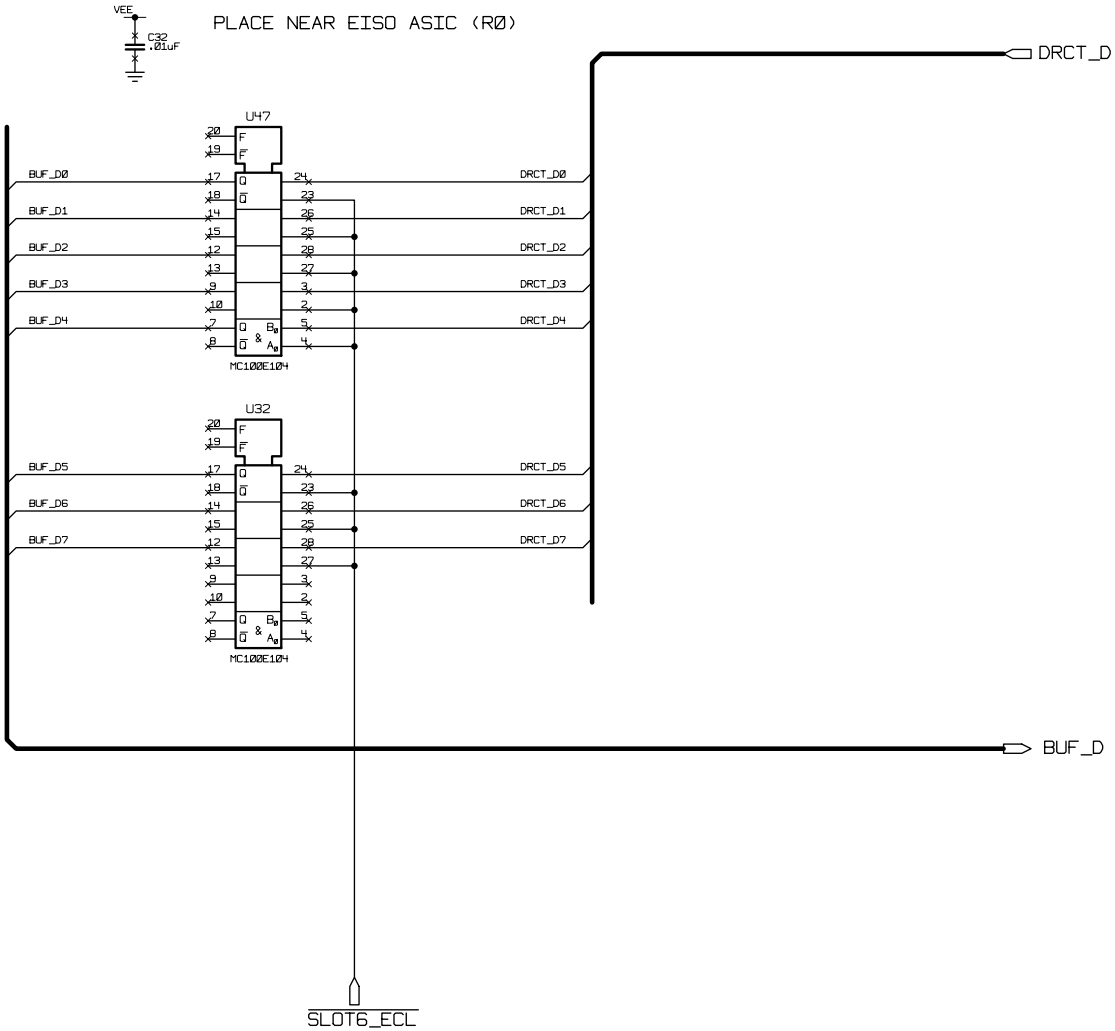

Changes	By	Date	Drawn JLL	Project CMS CAL TRIGGER PROCESSOR
			Date 23/10/01	EISO CARD
			CHK'D	BLOCK: BUF_D
			Scale	High Energy Physics
			C Ø789	University of Wisconsin
REVB	JLL	31/01/03		