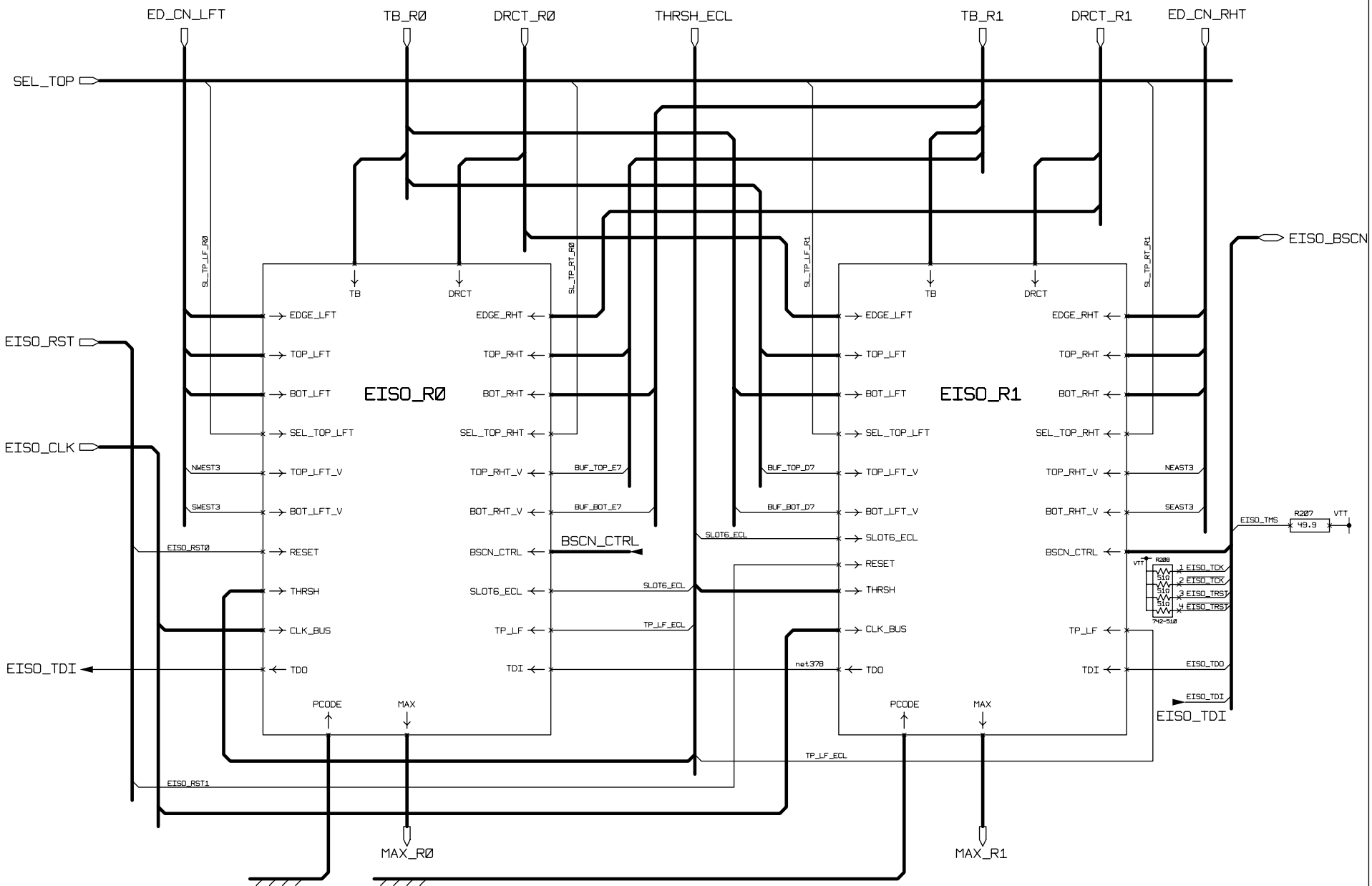

Changes	By	Date	Drawn JLL	Project CMS CAL TRIGGER PROCESSOR
			Date 22/10/01	EISO CARD
			CHK'D	BLOCK: EISO
			Scale	High Energy Physics
REVB	JLL	31/01/03	C 0782	University of Wisconsin