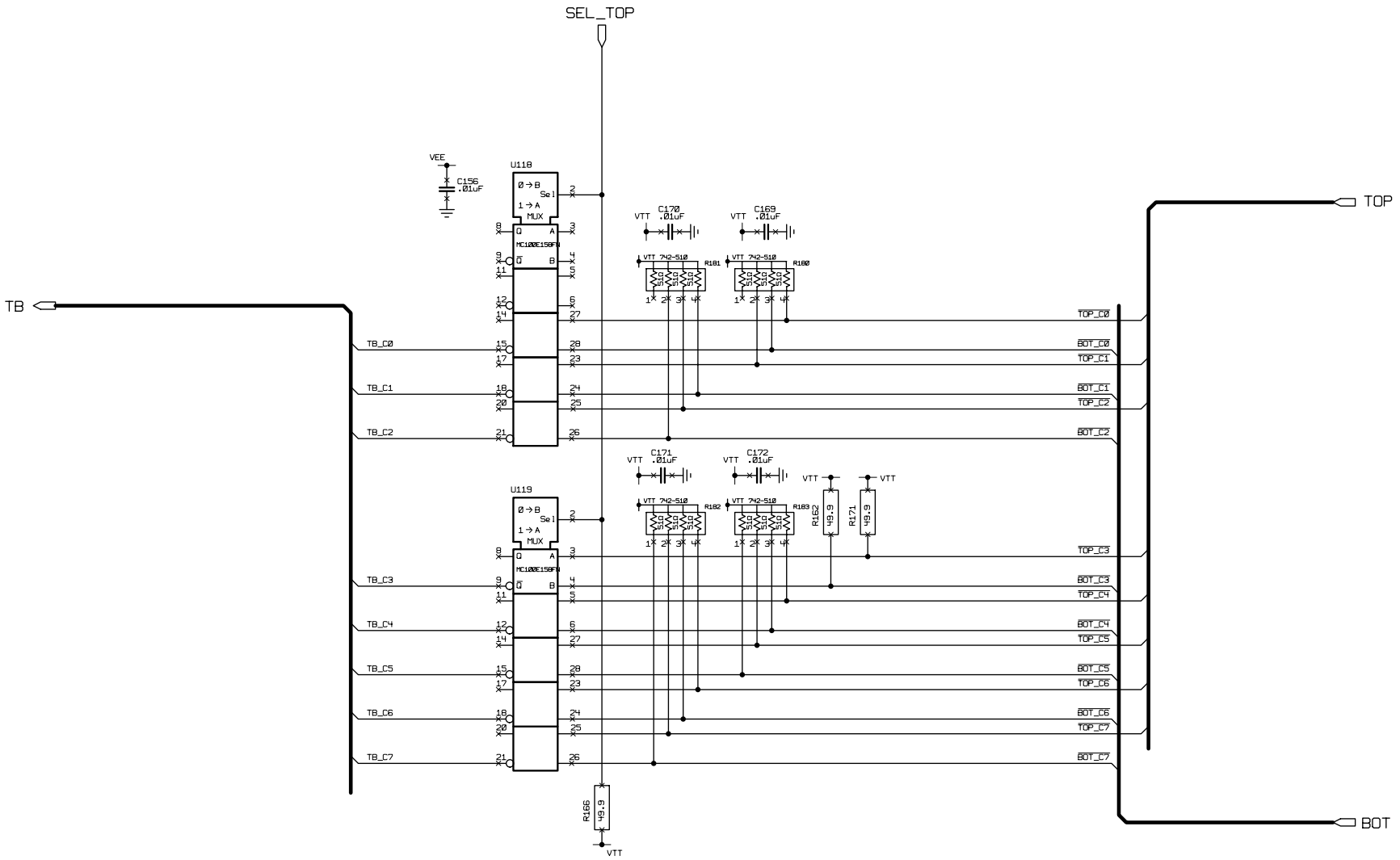

Changes	By	Date	Drawn JLL	Project CMS_CAL_TRIGGER_PROCESSOR
			Date 19/10/01	EISO CARD
			CHK'D	BLOCK: MUX2TO1_C
			Scale	High Energy Physics
REVB	JLL	31/01/03	C 0774	University of Wisconsin