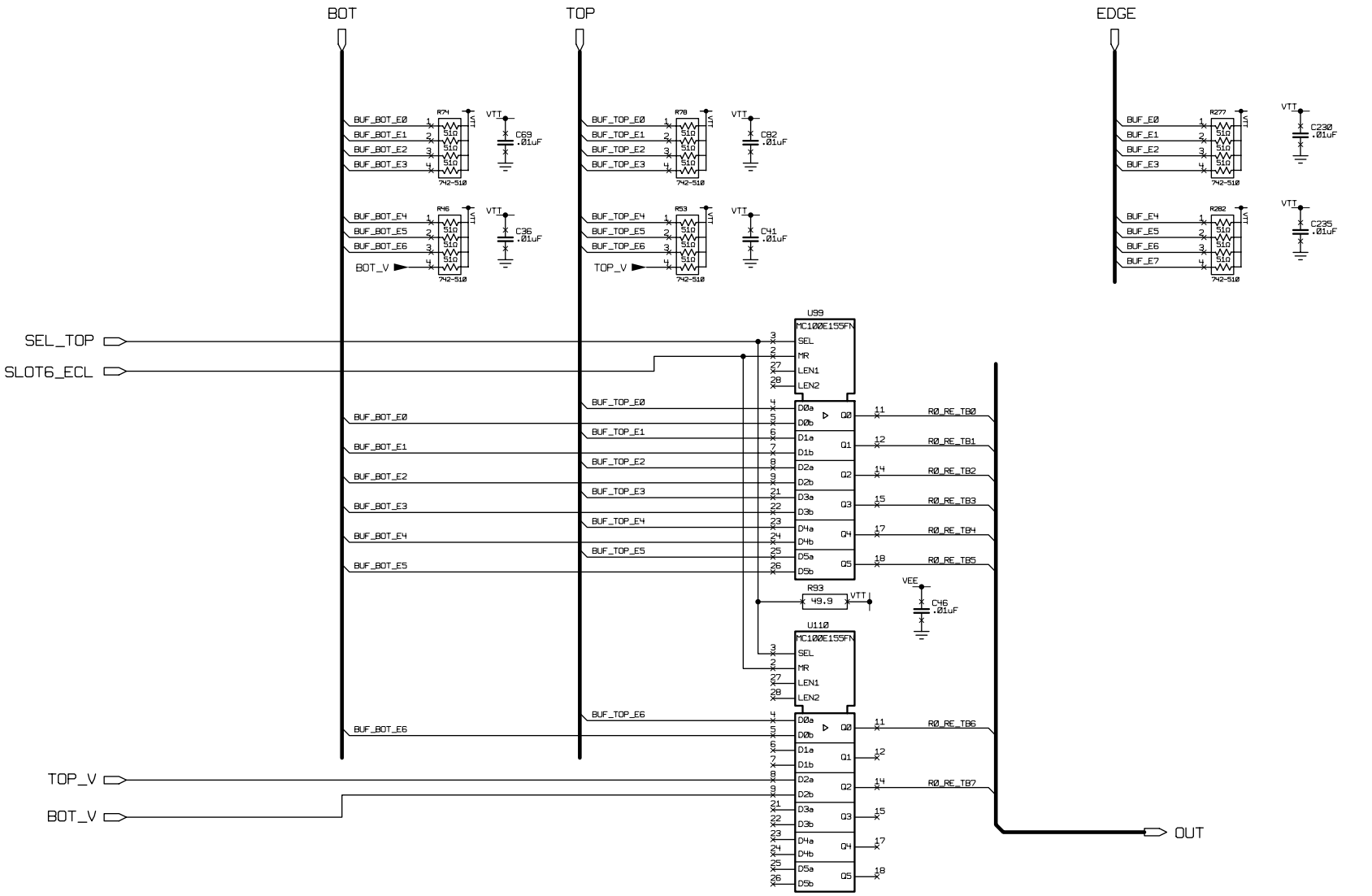

Changes	By	Date	Drawn JLL	Project CMS CAL TRIGGER PROCESSOR
			Date 23/10/01	EISO CARD
			CHK'D	BLOCK: RØ_CNR_RHT
			Scale	High Energy Physics
REVB	JLL	31/01/03	C 0788	University of Wisconsin