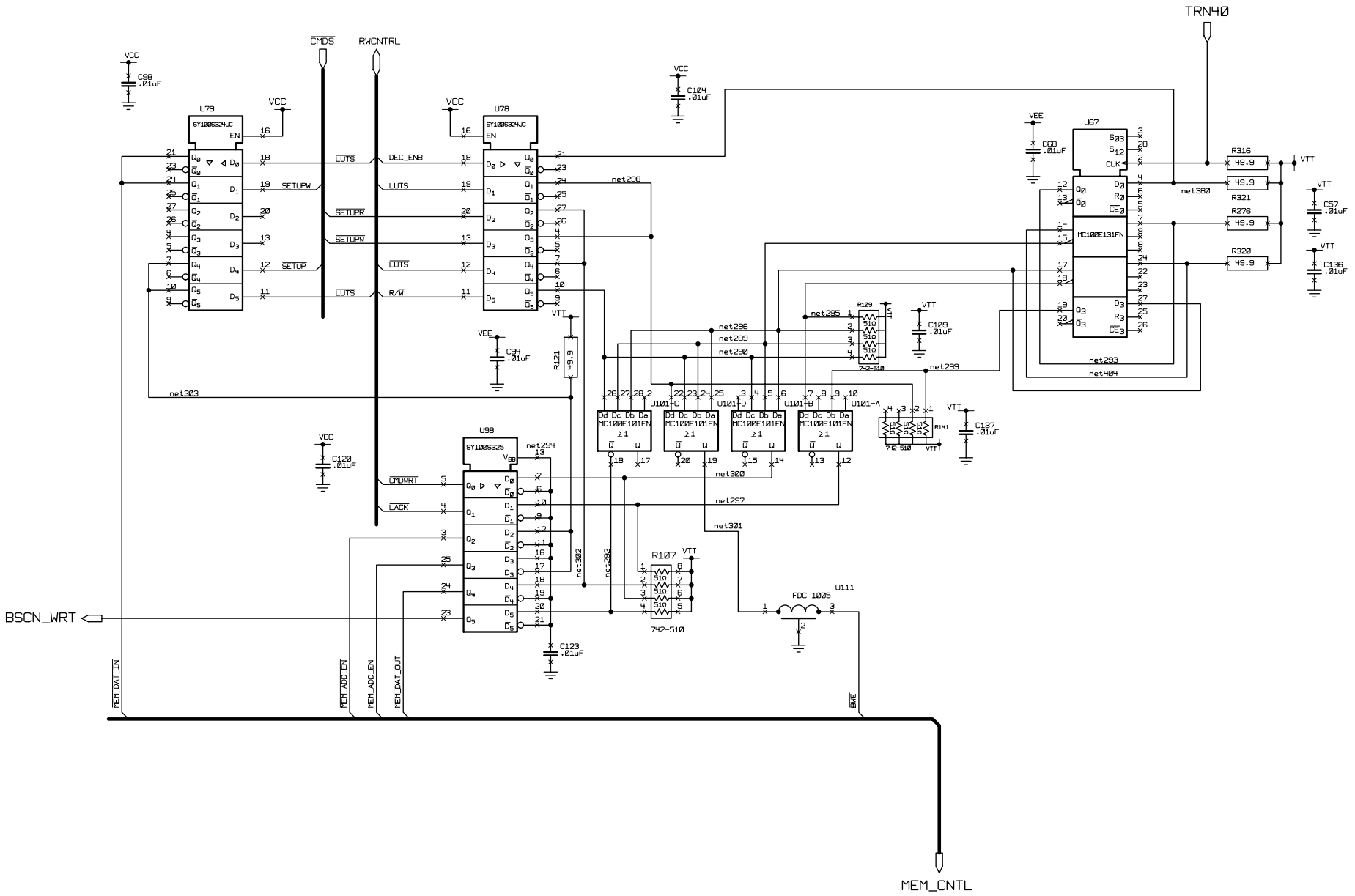

Changes	By	Date	Drawn JLL	Project CMS CAL TRIGGER PROCESSOR
			Date 14/6/00	EISO CARD
			CHK'D	BLOCK: RDWRTSEQ
			Scale	High Energy Physics
			C 0794	University of Wisconsin