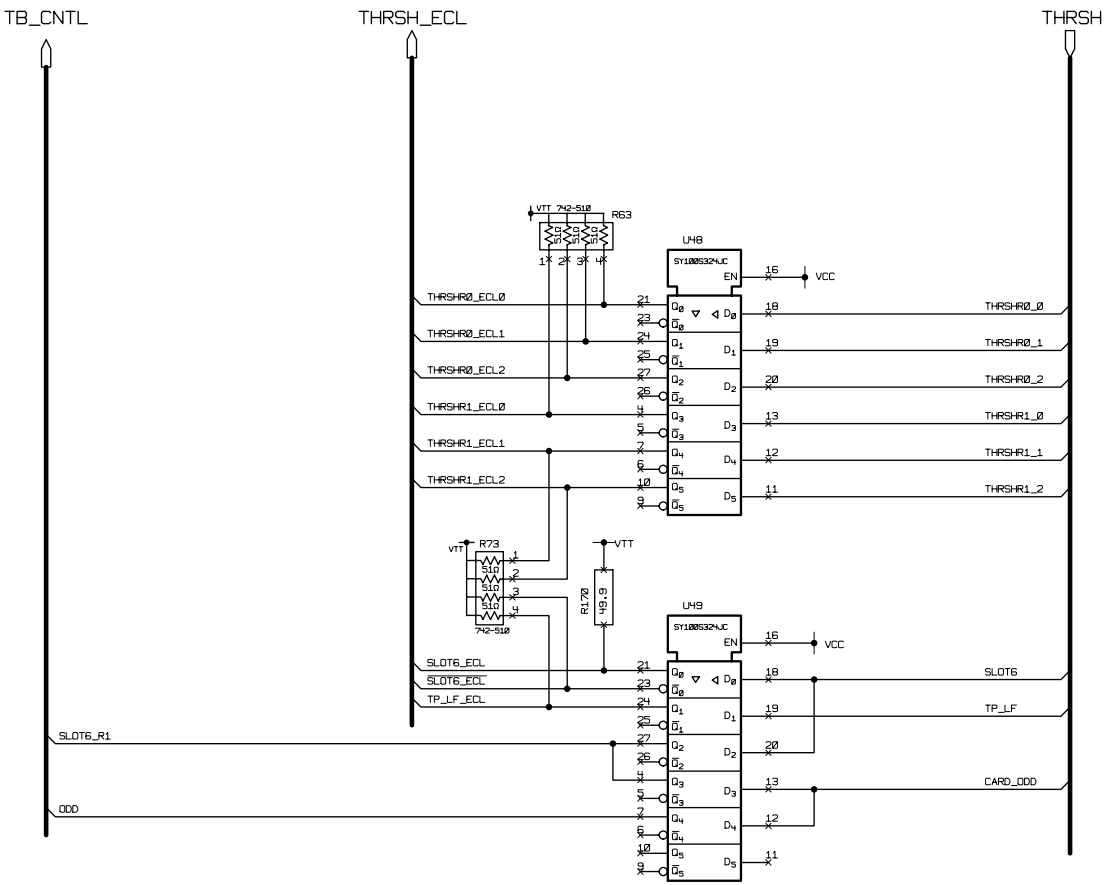

Changes	By	Date	Drawn JLL	Project CMS CAL TRIGGER PROCESSOR
			Date 31/01/03	EISO CARD
			CHK'D	BLOCK: THRSH_TRNS
			Scale	High Energy Physics
			C 0853	University of Wisconsin