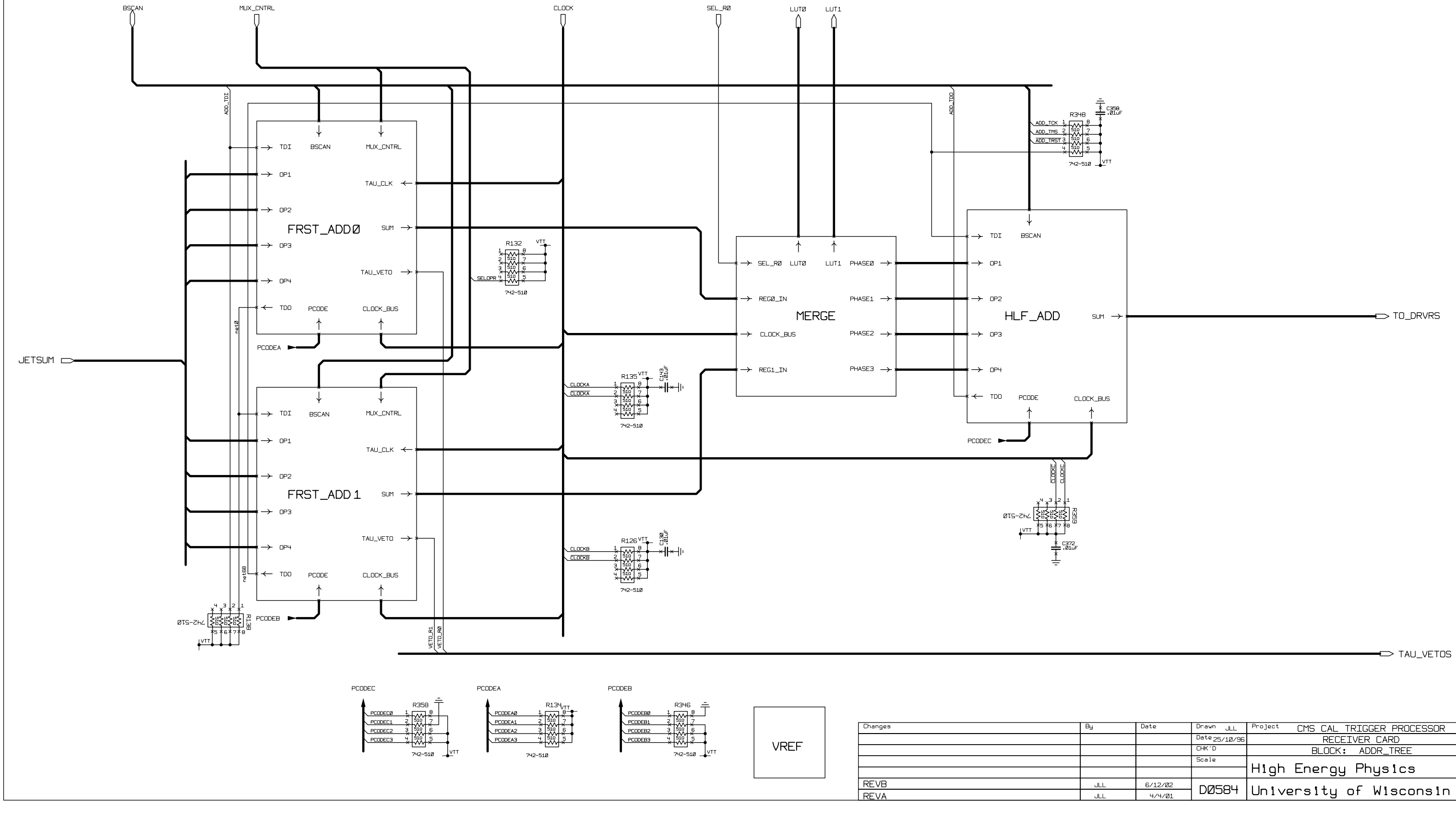

Changes	By	Date	Drawn JLL	Project CMS CAL TRIGGER PROCESSOR
			Date 25/10/96	RECEIVER CARD
			CHK'D	BLOCK: ADDR_TREE
			Scale	High Energy Physics
REVB	JLL	6/12/02	D0584	University of Wisconsin
REVA	JLL	4/4/01		