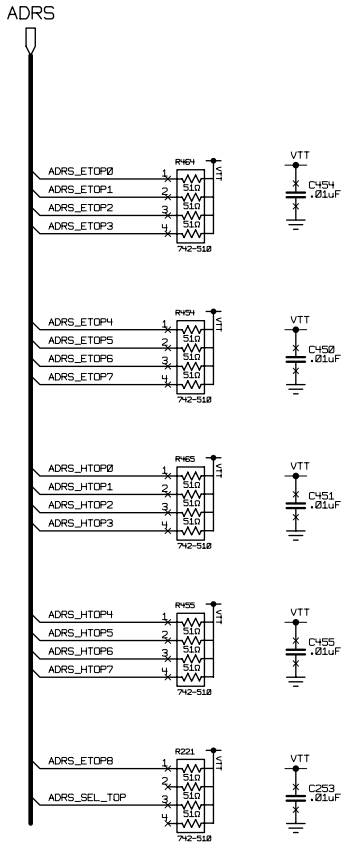

Changes	By	Date	Drawn JLL	Project CMS CAL TRIGGER PROCESSOR
			Date 21/03/01	RECEIVER CARD
			CHK'D	BLOCK: ADRS_TERM1
			Scale	High Energy Physics
REVB	JLL	6/12/02	C 0719	University of Wisconsin