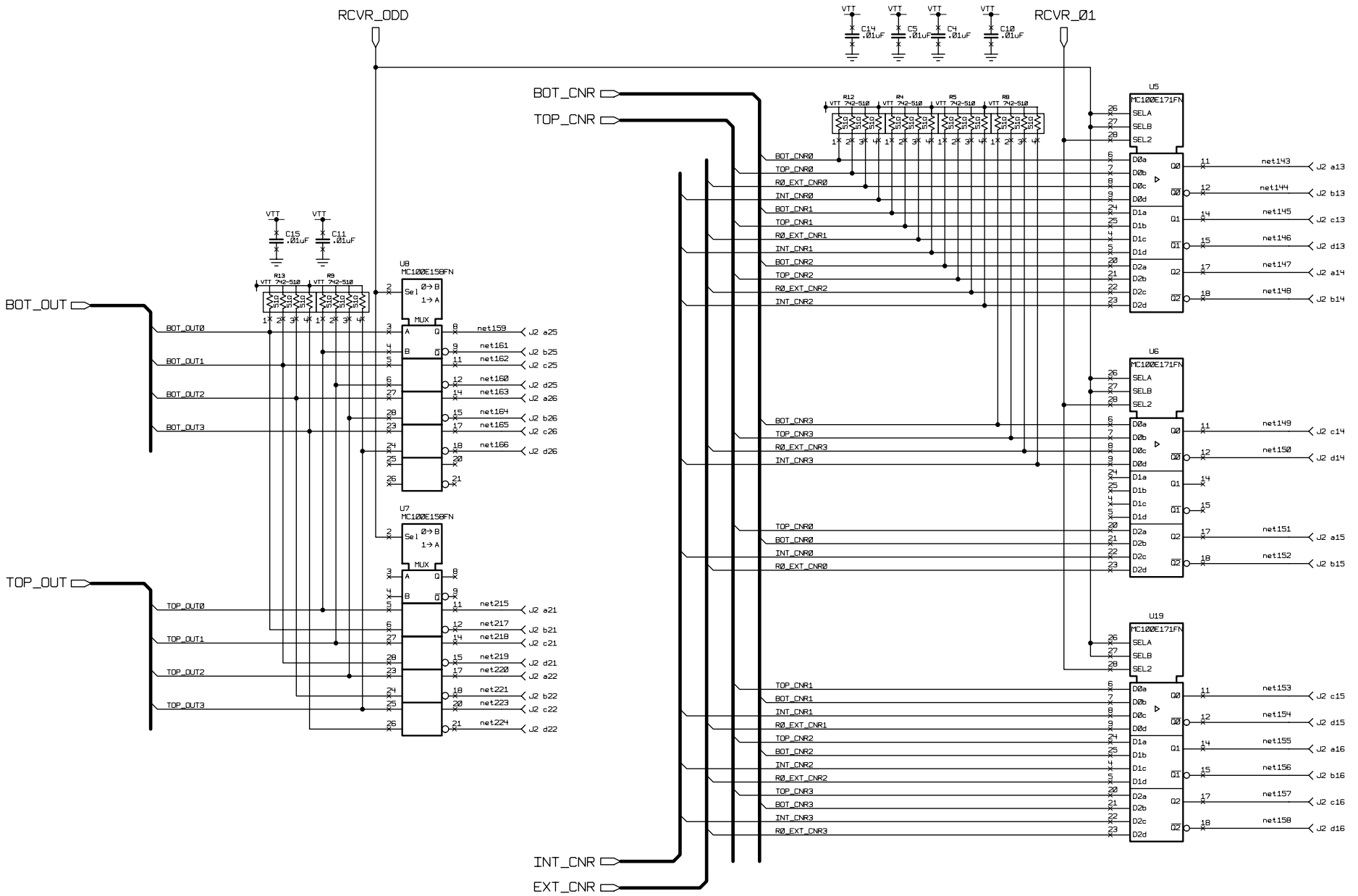

Changes	By	Date	Drawn JLL	Project CMS CAL TRIGGER PROCESSOR
			Date 17/Ø4/Ø1	RECEIVER CARD
			CHK'D	BLOCK: EDG_MUX_RØ
			Scale	High Energy Physics
			C Ø755	University of Wisconsin