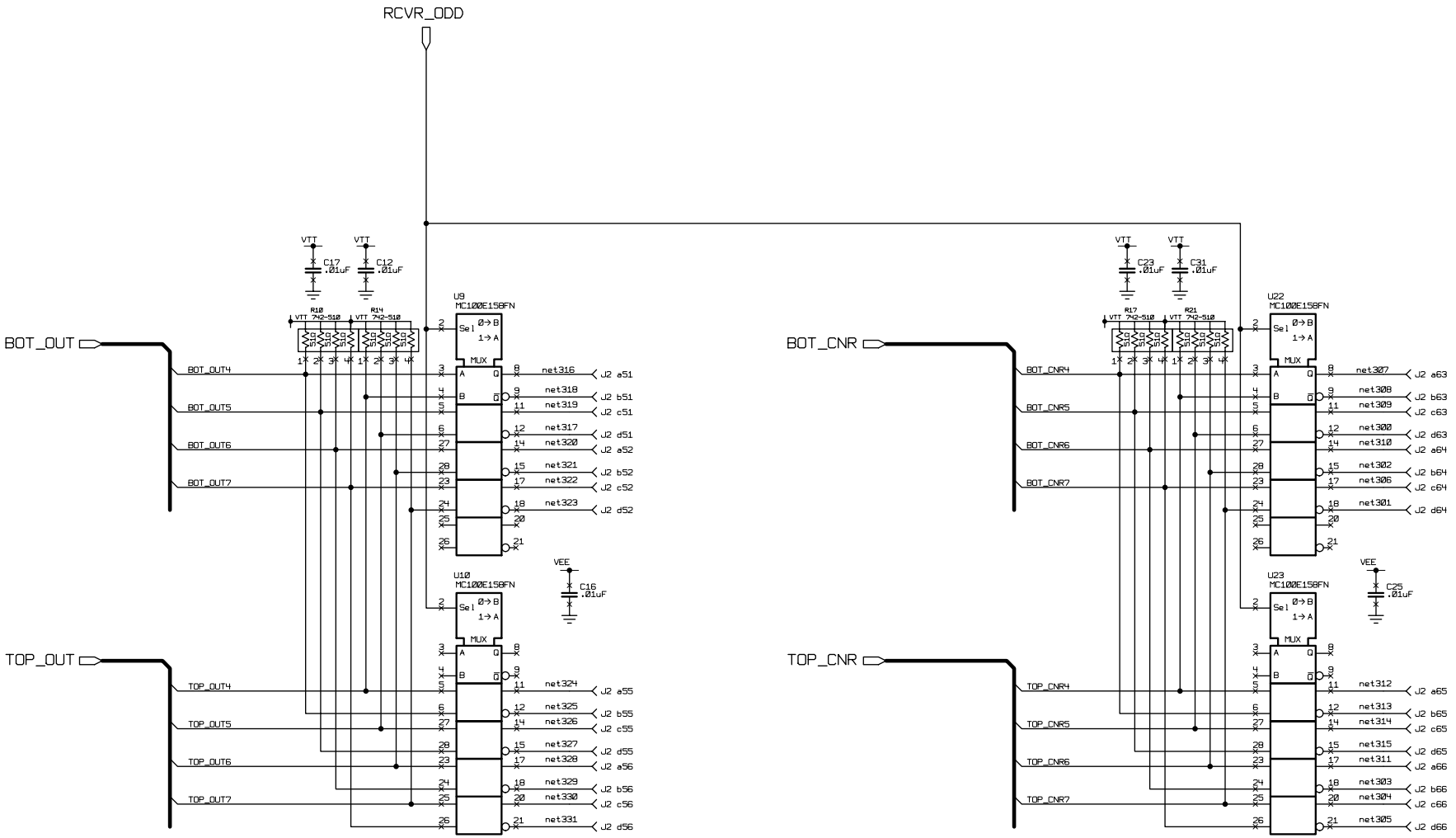

Changes	By	Date	Drawn JLL	Project CMS CAL TRIGGER PROCESSOR
			Date 17/04/01	RECEIVER CARD
			CHK'D	BLOCK: EDG_MUX_R1
			Scale	High Energy Physics
			C 0756	University of Wisconsin