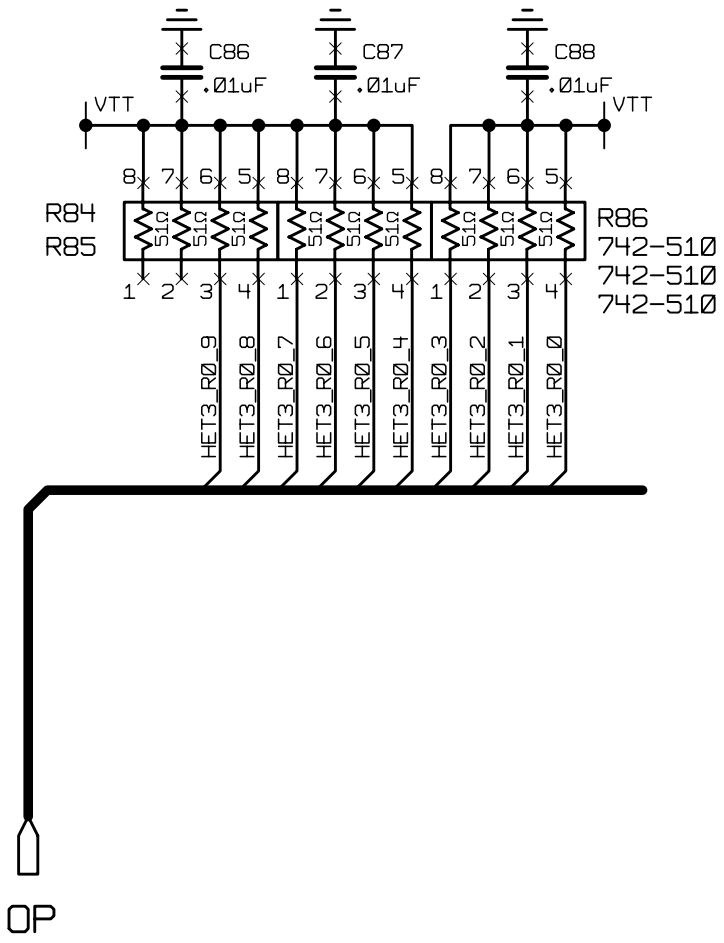

Changes	By	Date	Drawn JLL	Project CMS CAL TRIGGER PROCESSOR
			Date 1/11/96	RECEIVER CARD
			CHK'D	BLOCK: OP_TRMA4_Ø
			Scale	High Energy Physics
REVB	JLL	6/12/02	BØ587	University of Wisconsin
REVA	JLL	2/10/01		