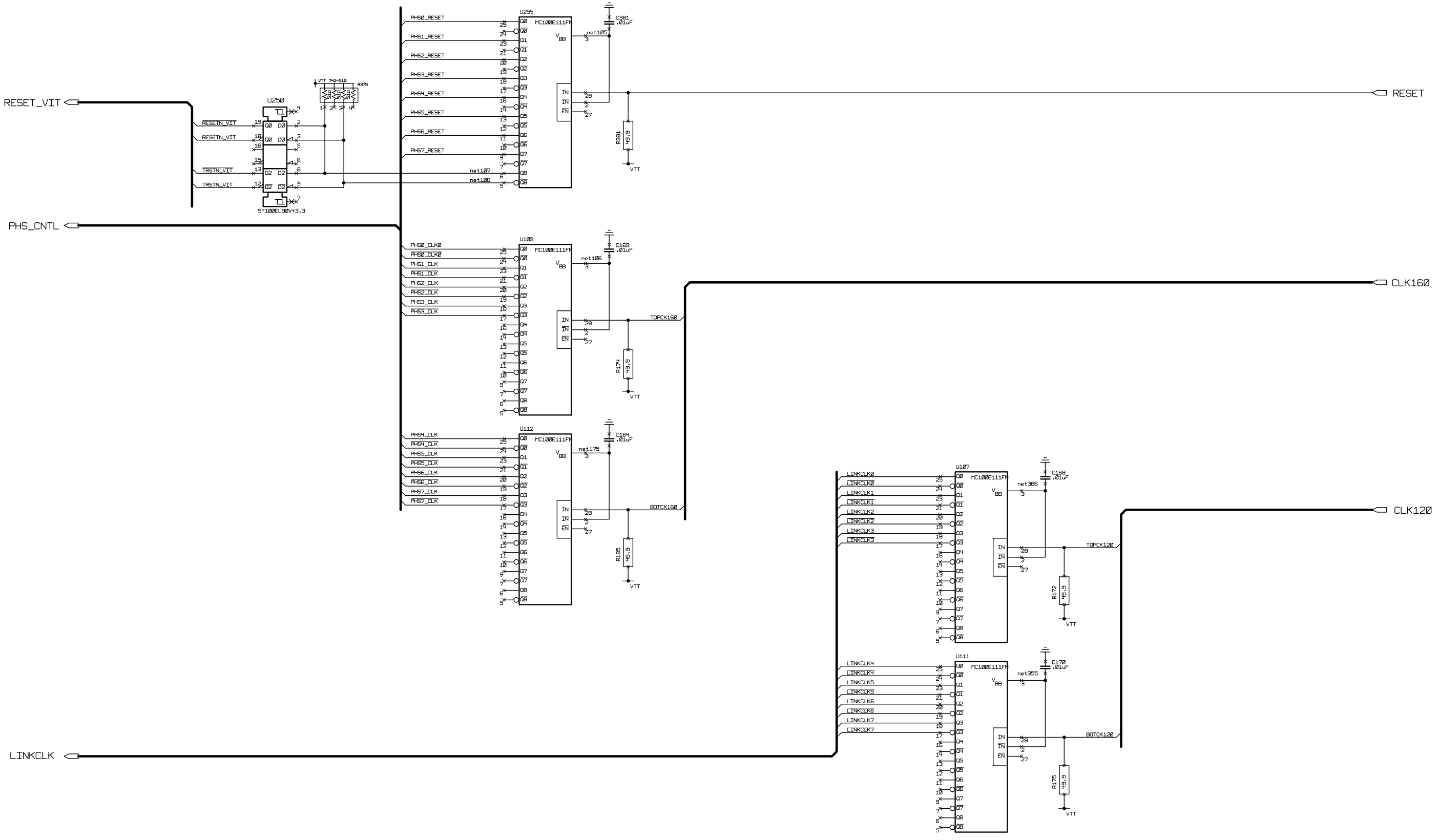

Changes	By	Date	Drawn JLL	Project CMS CAL TRIGGER PROCESSOR
			Date 28/Ø4/Ø1	RECEIVER CARD
			CHK'D	BLOCK: PHS_CNTL
			Scale	High Energy Physics
REVB	JLL	6/12/Ø2	D Ø732	University of Wisconsin