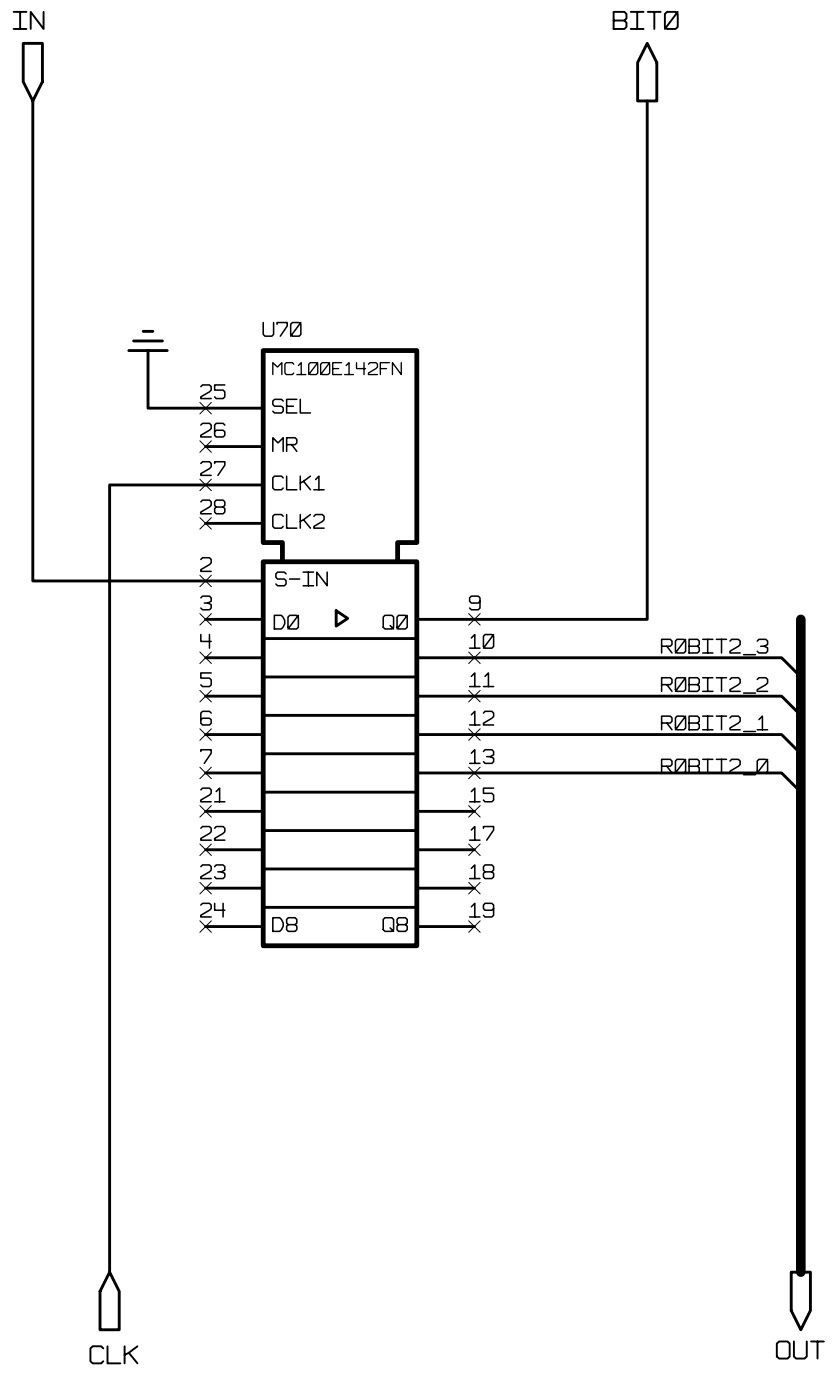

Changes	By	Date	Drawn JLL	Project CMS CAL TRIGGER PROCESSOR
			Date 31/10/96	RECEIVER CARD
			CHK'D	BLOCK: SHFT0 (REG0_2)
			Scale	High Energy Physics
REVB	JLL	6/12/02	B0604	University of Wisconsin