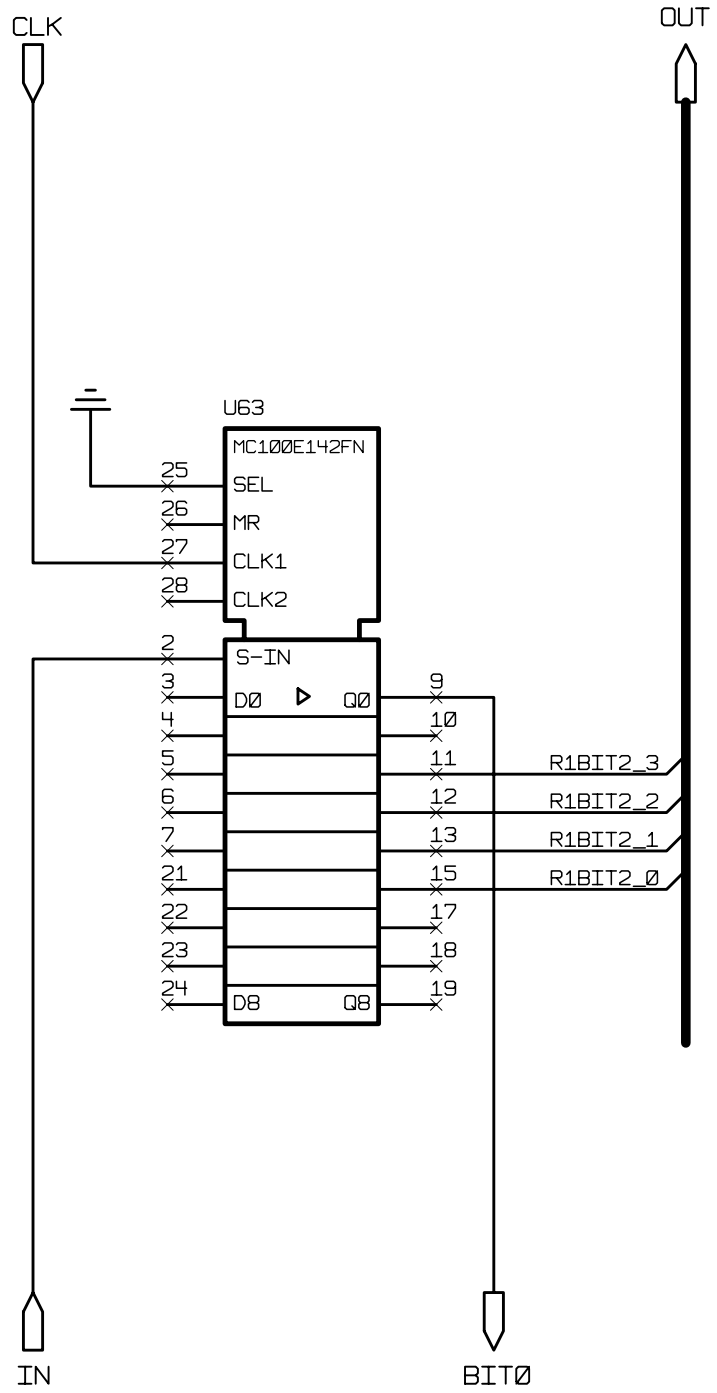


| Changes | By | Date | Drawn JLL | Project CMS CAL TRIGGER PROCESSOR |
|---|---|---|---|---|
| | | | Date 31/10/96 | RECEIVER CARD |
| | | | CHK'D | BLOCK: SHFT1 (REG1_2) |
| | | | Scale | High Energy Physics |
| | | | | |
| REVB | JLL | 6/12/02 | B0616 | University of Wisconsin |
| | | | | |