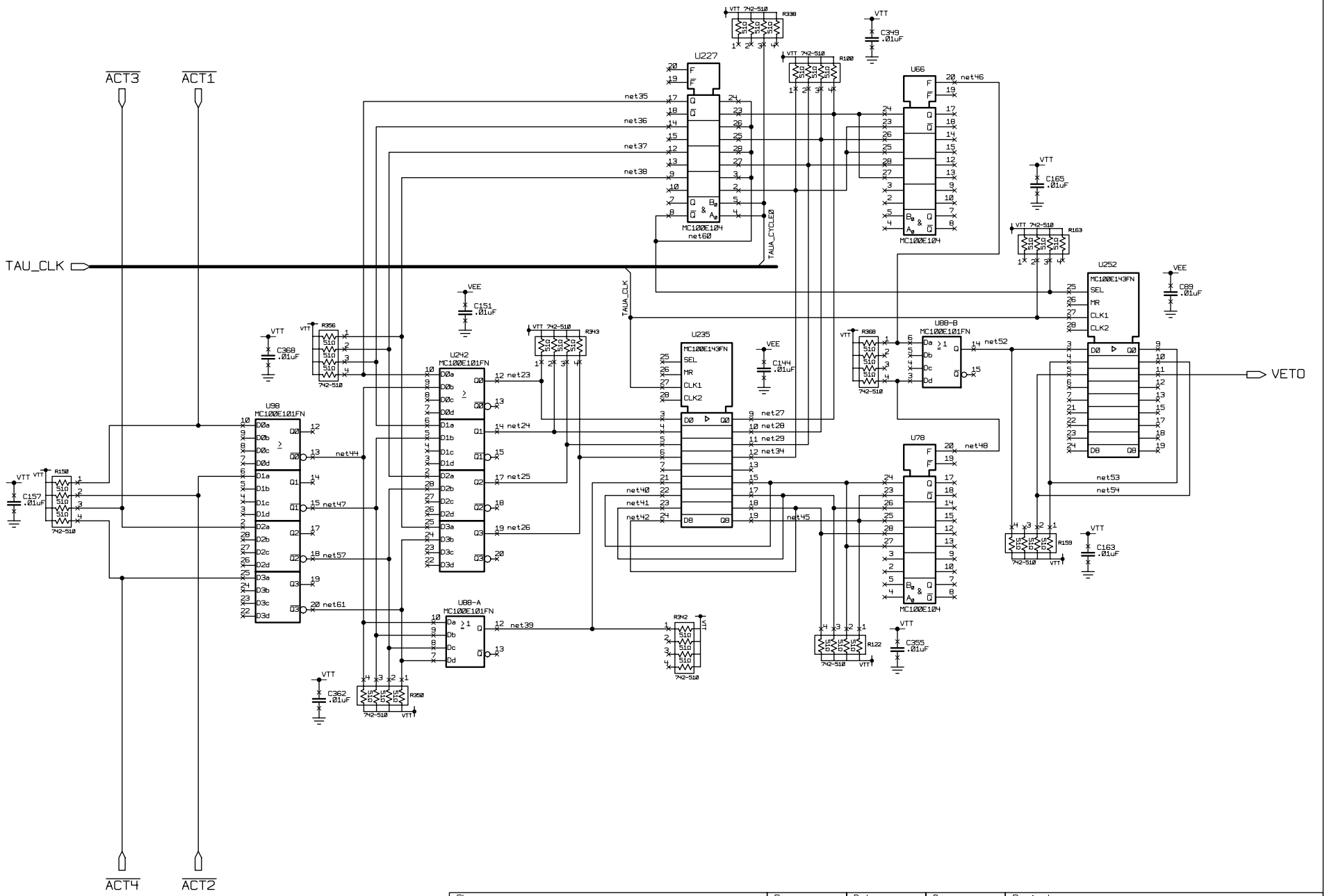

Changes	By	Date	Drawn JLL	Project CMS CAL TRIGGER PROCESSOR
			Date 7/4/01	RECEIVER CARD
			CHK'D	BLOCK: TAU_VETO_0
			Scale	High Energy Physics
REVB	JLL	6/12/02	C0723	University of Wisconsin